XT1086

Constant Coverage Horn

Key Features

1 inch throat entry
Unique Eighteen Sound elliptical shape (ESS)
Flat front and compact size
Die-cast aluminum construction for best heat transfer
Uniform on-axis and off-axis frequency response
80° x 60° horizontal and vertical constant coverage
Improved structure strength by exclusive computer aided vibrational analysis

General Description

Featuring the unique Eighteen Sound elliptical shape (ESS technology), the XT1086 Constant Coverage High Frequency Horn has been designed for use in sound systems where the highest sound quality is required. With a 1 inch throat entry, the XT1086 has been designed to match the Eighteen Sound 1 inch exit high frequency compression drivers perfectly.
The XT1086 maintains nominal 80° Horizontal x 60° Vertical pattern control. It provides consistent on-axis and off-axis frequency response from 1,4kHz to 16kHz in the horizontal plane and from 1,5kHz to 16kHz in the vertical plane. Horn directivity is constant from 1,4kHz. Thanks to its compact vertical mouth dimension, the XT1086 can easily be staked vertically when lower frequency control is required.
The main innovation that the XT1086 introduces, is the improved external shape, providing high structural rigidity. This has been developed using exclusive a computer aided vibration analysis system. This product provides low distortion and a spherical wave-front, avoiding reflections and other disadvantages usually associated with diffraction horns. The die-cast aluminum construction provides optimum heat transfer, lowering the driver power compression and improving its general power handling capability.

0421086000

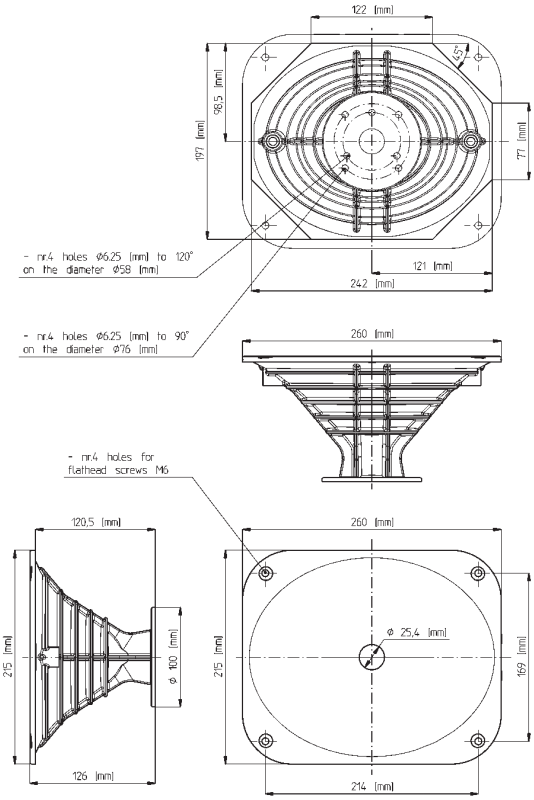

CONSTANT COVERAGE HORNS

info@eighteensound.com
www.eighteensound.com

XT1086

Constant Coverage Horn

GENERAL SPECIFICATIONS

THROAT DIAMETER	25,4 mm (1 in)
HORIZONTAL COVERAGE (-6 DB)	80° (1 ÷ -8) average range(1,6kHz - 12,5kHz)
VERTICAL COVERAGE (-6 DB)	60° (18 ÷ -7) average range(1,6kHz - 12,5kHz)
DIRECTIVITY INDEX	15 dB (1.3 ÷ -0,4) average range (1.6kHz - 12.5kHz)
USABLE FREQUENCY RANGE	Above 800 Hz
RECOMM. CROSS. FREQUENCY	1200 Hz or more
SENSITIVITY (ON AXIS) (1)	110 dB
FREQUENCY RANGE	1200 Hz ÷ 18kHz
MATERIAL	Die-cast aluminum

MOUNTING INFORMATIONS

Mouth Height	215 mm (8,5 in)
Mouth Width	260 mm (10,2in)
Depth	126 mm (5 in)
Mouth Mounting Dimensions	4 ø 6 holes on the edge of rectangle with 214 mm x 169 mm (8,43 x 6,65 in) sides
Net weight	1 Kg (2,20 lb)

HORIZONTAL BEAMWIDTH – RED PLOT – VERTICAL BEAMWIDTH – BLUE PLOT – A

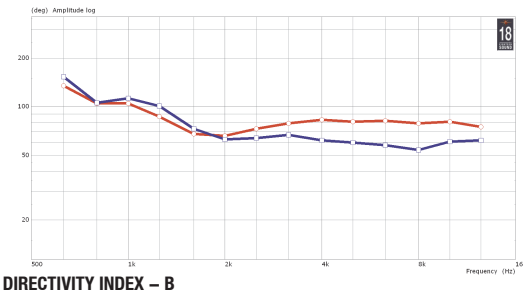

A

DIRECTIVITY INDEX – B

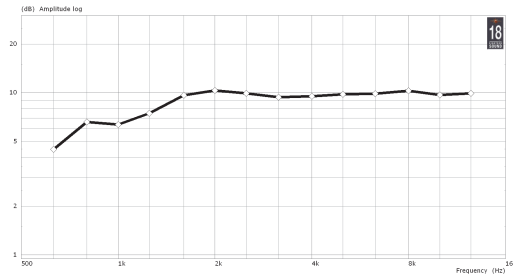

B

HORIZONTAL POLAR DIRECTIVITY MAP – C
VERTICAL POLAR DIRECTIVITY MAP – D

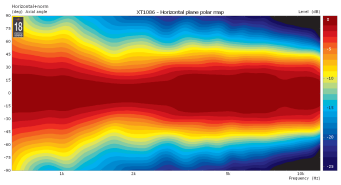

C

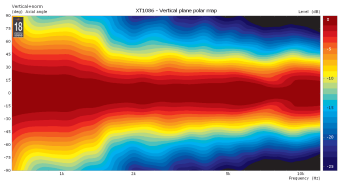

D

NOTES
(1) Sensitivity is measured at 1W input on ND1090 compression driver rated impedance at 1m on axis from the mouth of the horn, averaged between 1kHz and 4 kHz.

HORIZONTAL 1/3 OCTAVE POLARS

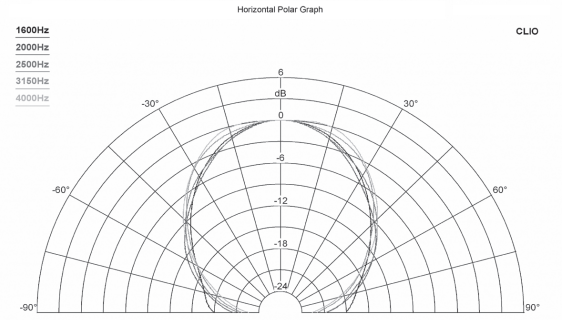

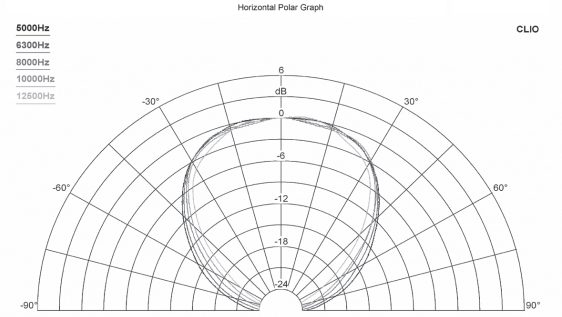

VERTICAL 1/3 OCTAVE POLARS

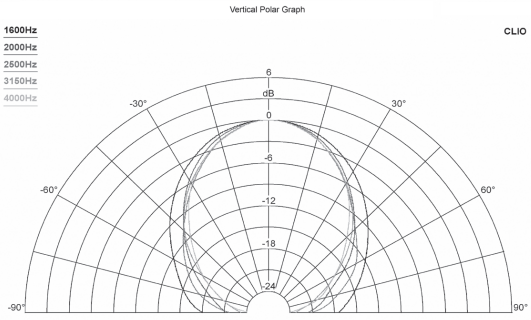

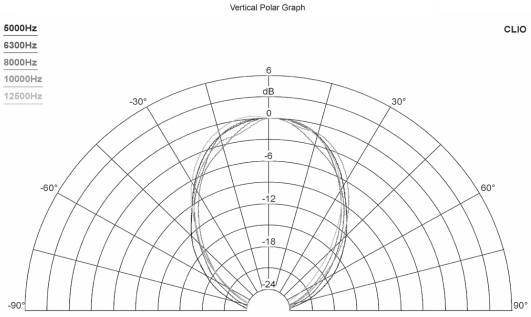

Eighteen Sound engages in research and product improvement. New materials and design refinements can be introduced into existing products without notice.