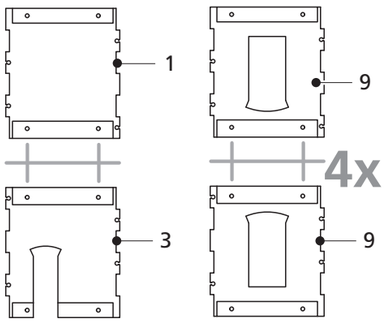
1
9
4x
3
9

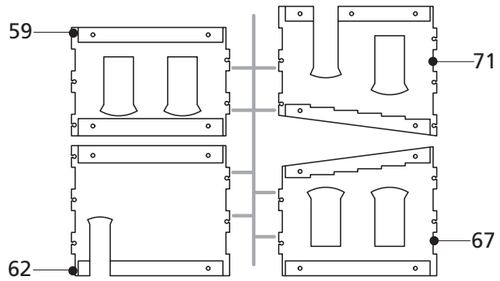
59
71
62
67

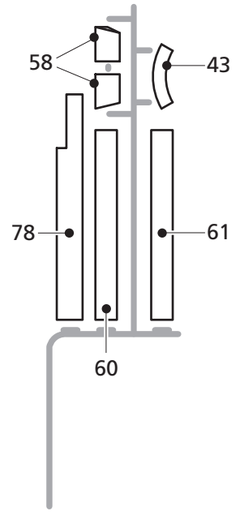
58
43
78
61
60

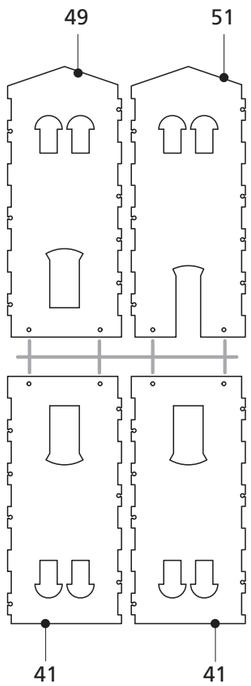
49
51
41
41

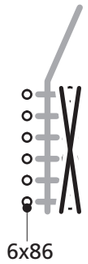
6x86

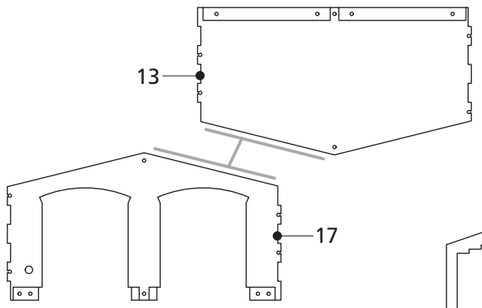
13
17

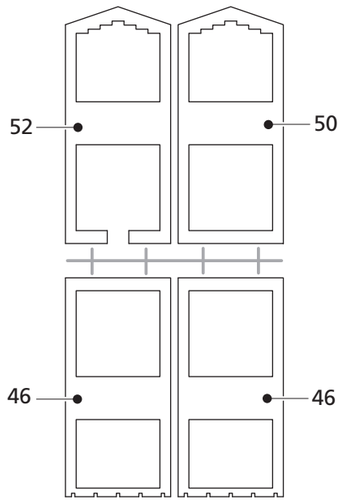
52
50
46
46

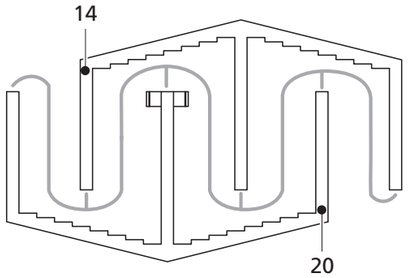
14
20

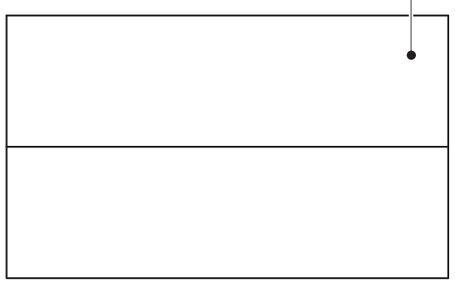
29

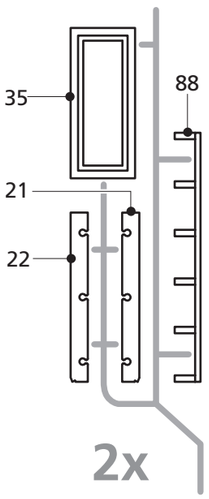
35
88
21
22
2x

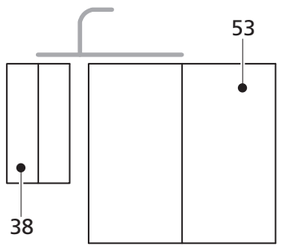
53
38

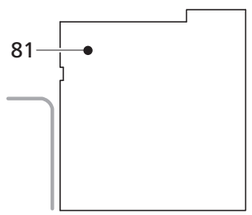
81

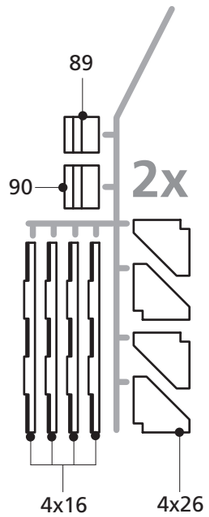
89
90
2x
4x16
4x26

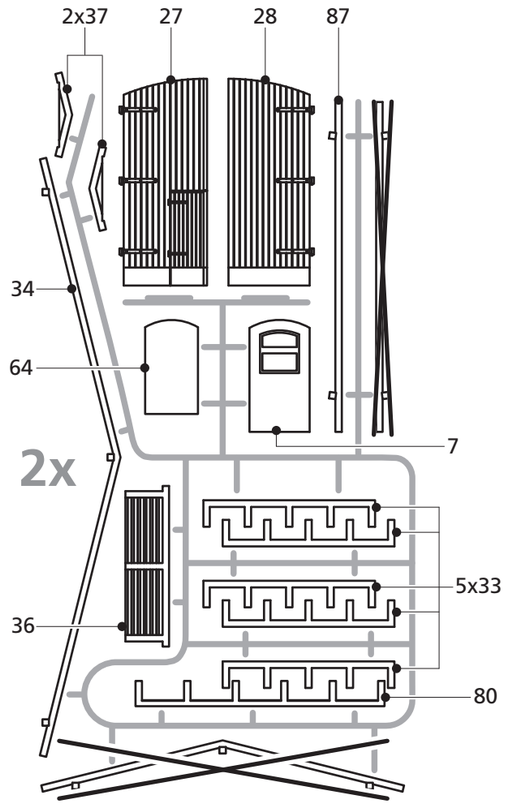
2x37
27
28
87
34
64
7
2x
5x33
36
80

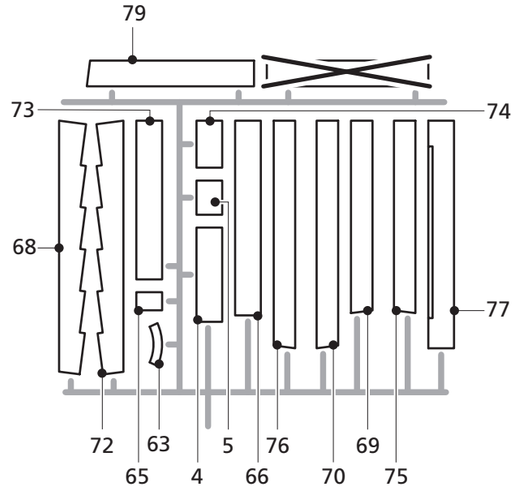
79
73
74
68
77
72
63
5
76
69
65
4
66
70
75

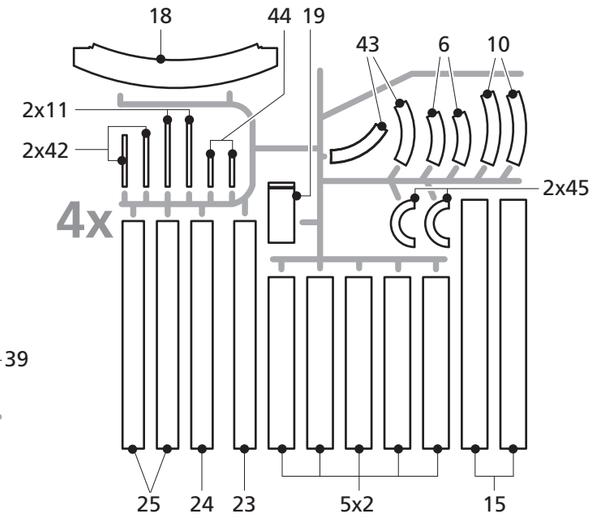
18
44
19
43
6
10
2x11
2x42
2x45
4x
25
24
23
5x2
15

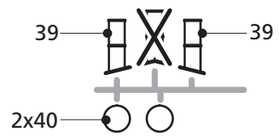
39
39
2x40

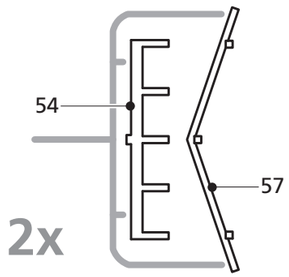
54
57
2x

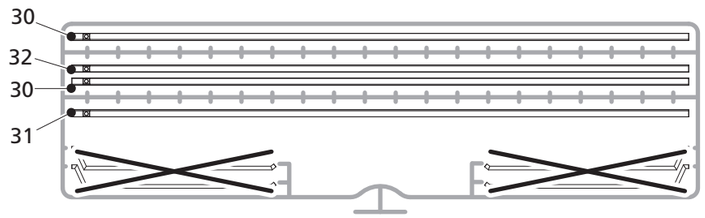
30
32
30
31

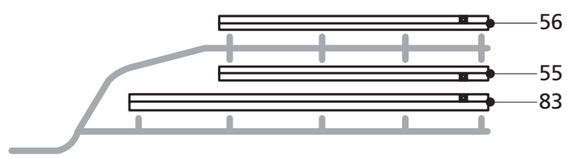
56
55
83

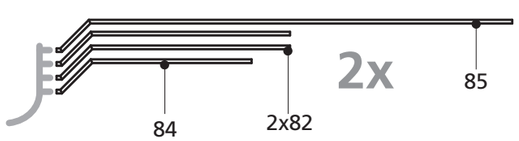
2x
85
84
2x82

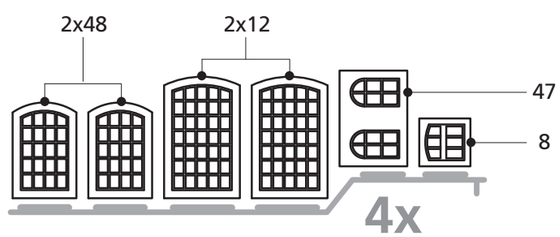
2x48
2x12
47
8
4x